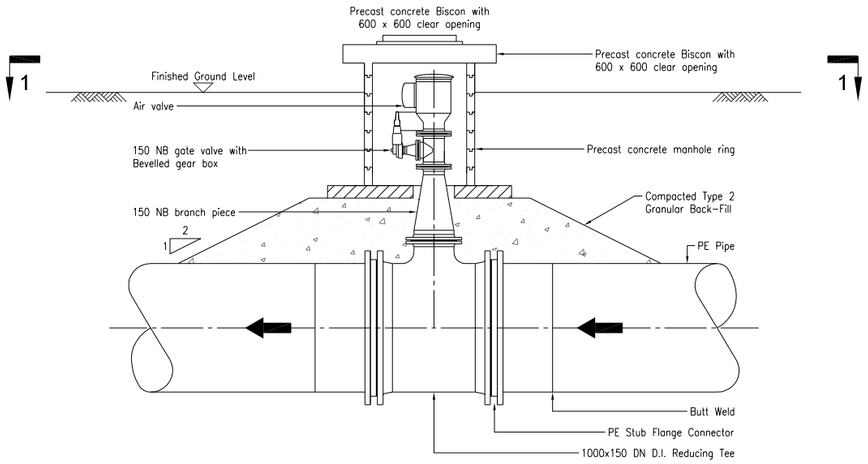


SECTION A-A

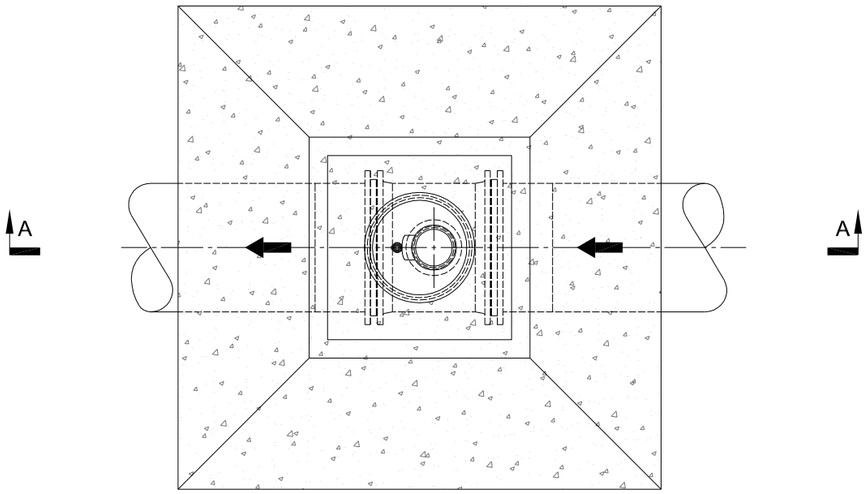


PLAN ON 1-1

NOTES

1. All dimensions in millimetres and all levels in metres unless shown otherwise.

SCALE 1 : 25

m1 0 1 m

CURRENT ISSUE INFORMATION

1. AIR VALVE DETAILED.

**FOR PLANNING**

| DATE | DRWN | CHKD | REVD | ISSUE | |
|---|---|---|---|---|---|
| 29.01.08 | PS | AD | MG | A | ISSUED FOT ATC |

SCOTTISH WATER

SW DRAWING NO.

031851-0231-20-DRG-9651

THIS DRAWING IS THE PROPERTY OF SCOTTISH WATER AND MUST NOT BE COPIED OR USED FOR ANY PURPOSE OTHER THAN THAT FOR WHICH IT IS SUPPLIED WITHOUT THE WRITTEN CONSENT OF SCOTTISH WATER.

PREVIOUS VERSIONS OF THIS DRAWING SHOULD BE STAMPED SUPERSEDED OR DESTROYED

DO NOT SCALE THIS DRAWING - IF IN DOUBT ASK

GLENCORSE WATER TREATMENT WORKS

TYPICAL AIR VALVE DETAIL

| CONTRACT NO. | SCALE | MASTER SIZE |
|---|---|---|
| 01 | 1 : 25 | A1 |

| DRAWING NO. | ISSUE |
|---|---|
| 41514629/01/231/2051 | A |

Background mapping data provided by Scottish Water. Reproduced from the OS map with the permission of the Controller of HMSO, Crown Copyright. Unauthorised reproduction infringes Crown Copyright and may lead to prosecution or civil proceedings.
Licence Number : GD03135G0017