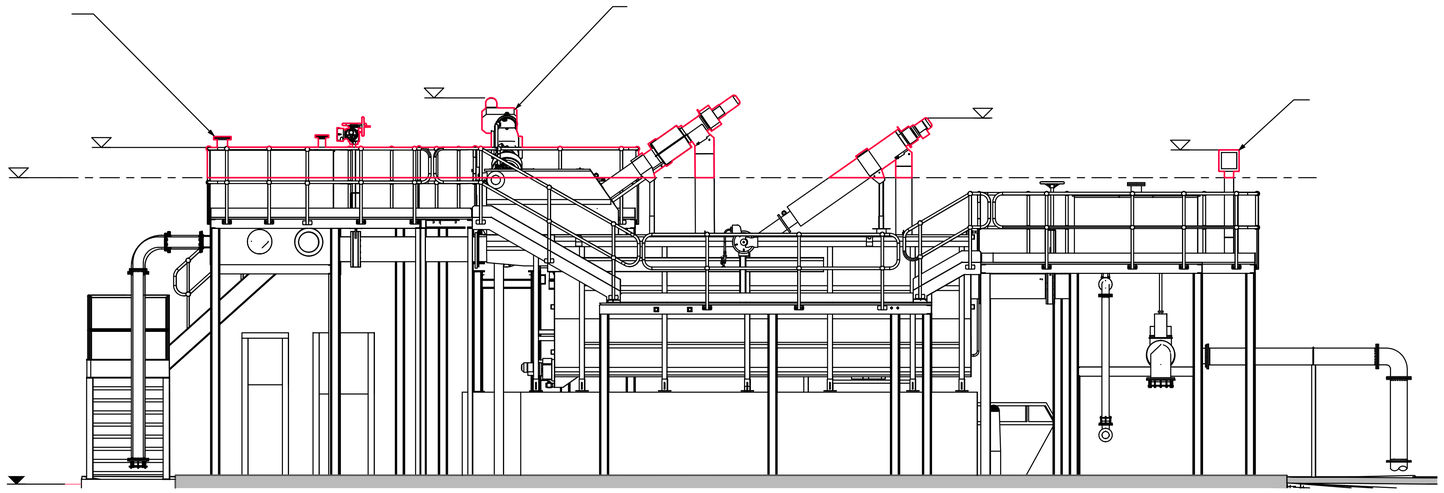

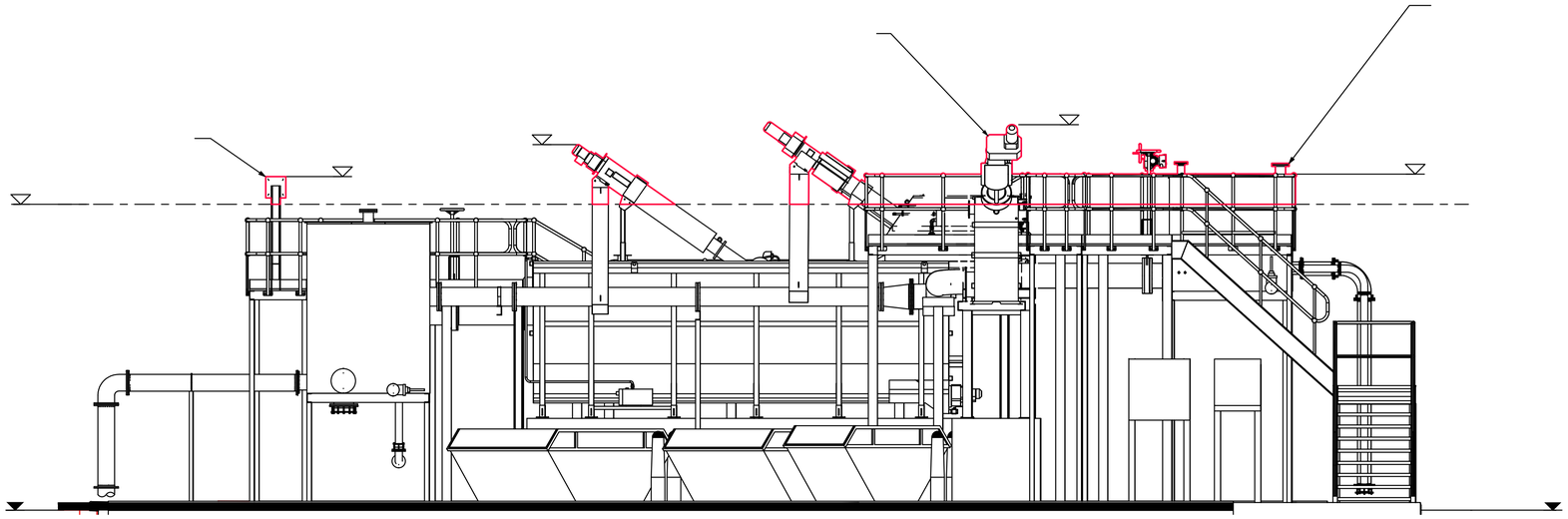

Scottish Water
Trusted to serve Scotland

esd
efficient service delivery